EQUIPMENT RAIL

40 Pixley Industrial Pkwy
Rochester, NY 14624
Phone: (585) 426-0891
Fax: (585) 429-9843
RequestForQuote@northernfabricators.com

STANDARD CONSTRUCTION

- 18GA Galvanized Steel
- Galvanized Cap
- Wood Nailer
- Solid Welded Seam
- 2” Flange Out

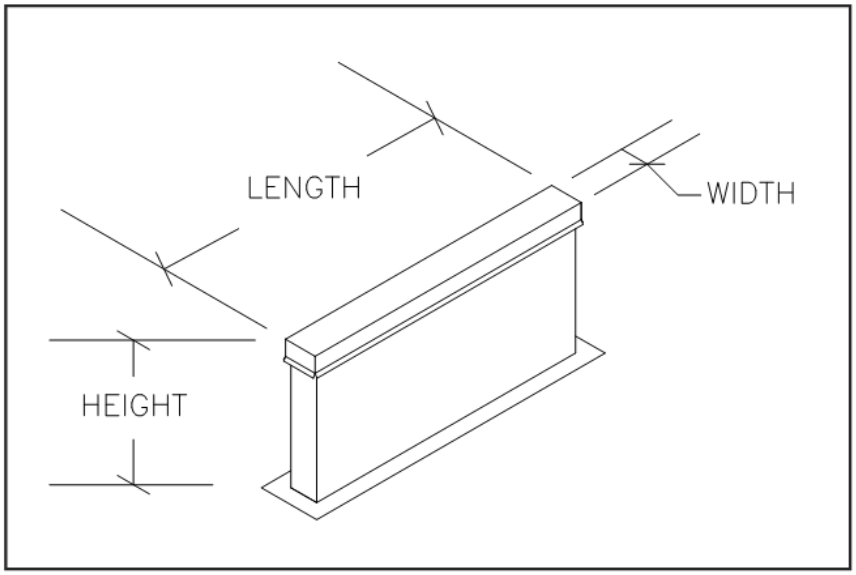

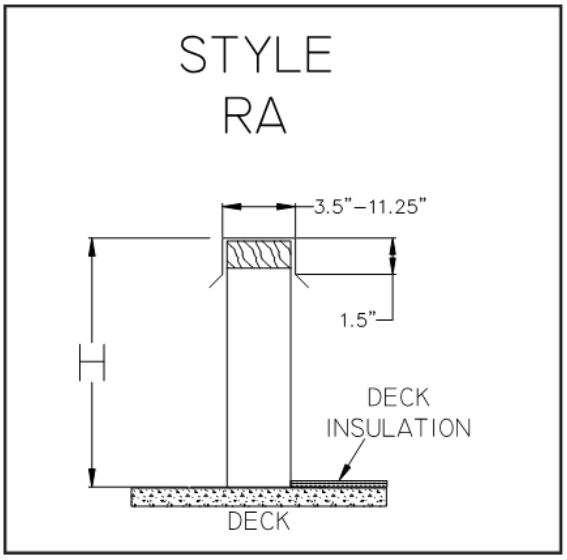

QTY	TAG	LENGTH	WIDTH	HEIGHT	PITCH (Long Side)	PITCH (Short Side)	SPECIAL INSTRUCTIONS